KENWOOD

KWC-B21 Instruction Manual

Version 1.2

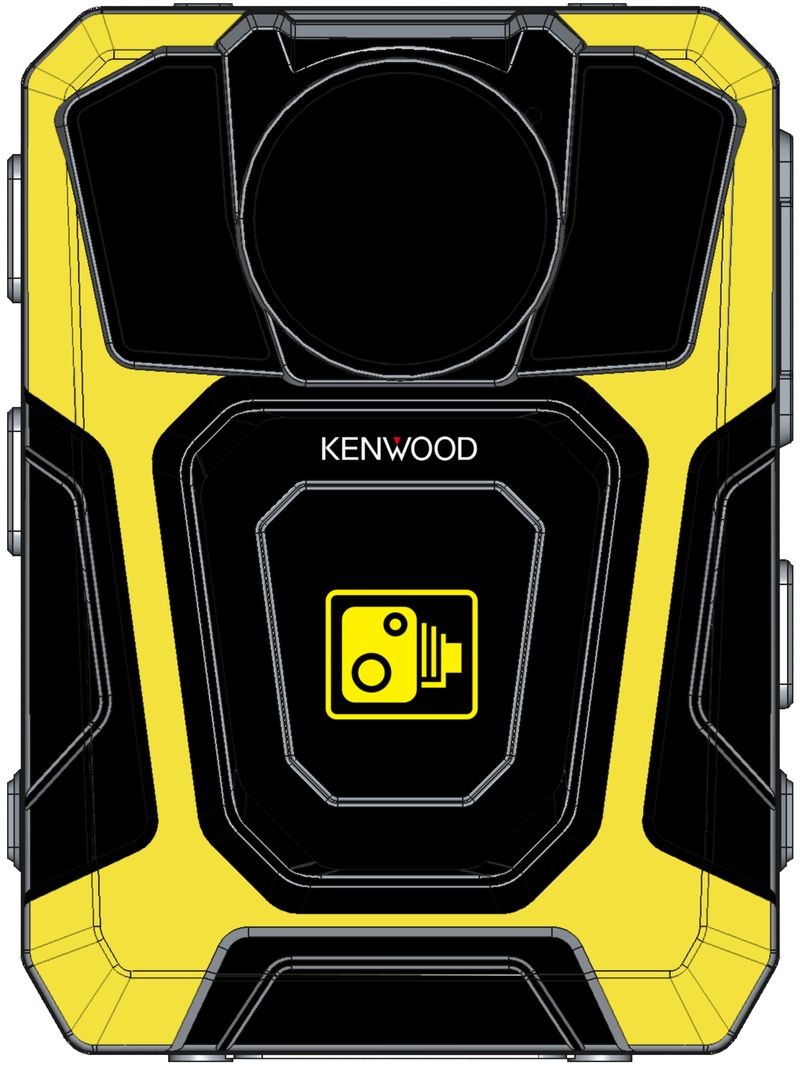

www.kenwoodcommunications.co.uk/body-worn-camera/

Contents

Page 3 Buttons and LEDs

Page 4 Quick Start Guide

Page 5 Mounting

Page 6 General Camera Operation

Page 7 Warnings

Page 8-9 Video Setting

Page 10-11 General Settings Menu

Page 11 About Device

Page 12 USB Connection

Page 13-14 FAQs

Page 15 Specifications

Page 16 Important Information
- Battery Safety
- Battery Storage

Buttons & LEDs

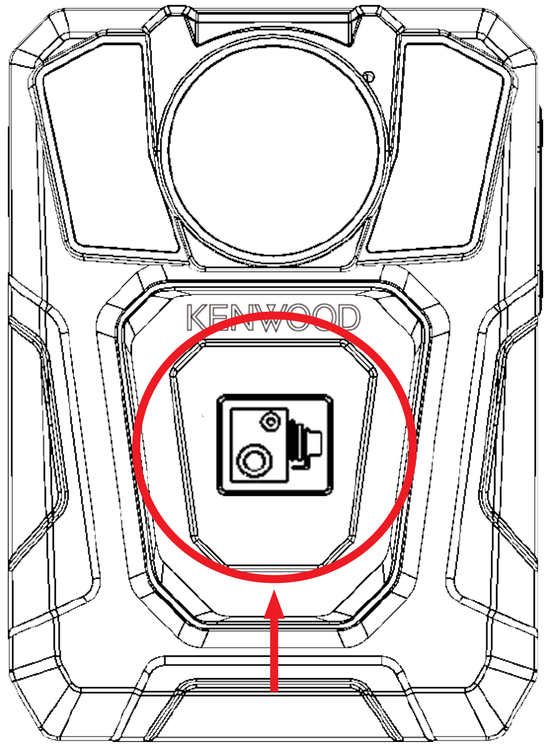

Front Video Record Button

[PRESS ONCE] to **“START/STOP”** recording, if **“POST RECORD” [PRESS TWICE]**.

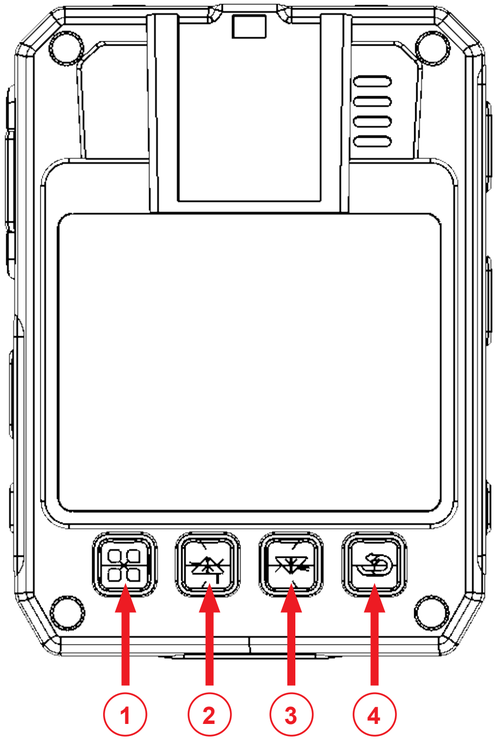

Menu Navigation Buttons

1. **Enter** - **[PRESS]** for menu settings to select highlighted option
   See page 10 for further information on Menu Settings
2. **Up** - Move cursor up
3. **Down** - Move cursor down
4. **Back** - Press for playback mode and go to previous screen

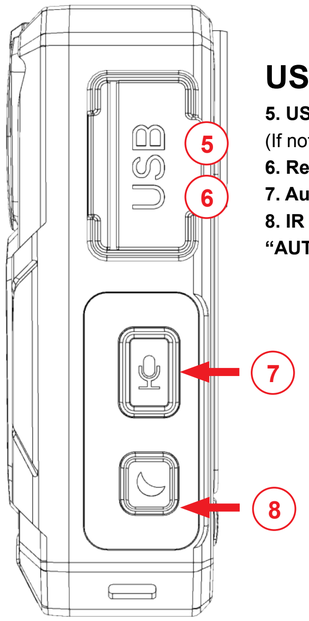

USB Side

5. **USB-C** - Charging Camera
(If not using docking station)
6. **Reset** - Pinhole Reset Camera
7. **Audio Only Recording**
8. **IR Light** - **[PRESS AND RELEASE]** for **“MANUAL IR”** (if not preset to **“AUTOMATIC”** in camera settings). **[PRESS AND HOLD]** for torch.

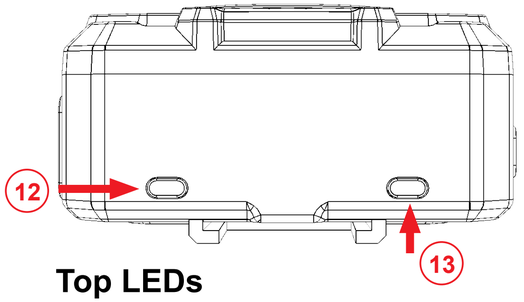

Top LEDs

12. **Recording Operational** - A **“SOLID RED”** light indicates the camera is recording. (If flashing **“PRE EVENT RECORD”** is set)
13. **Power/Charging** - The light **“GLOWS BLUE”** while the camera is charging. (LED will turn off when battery is fully charged)

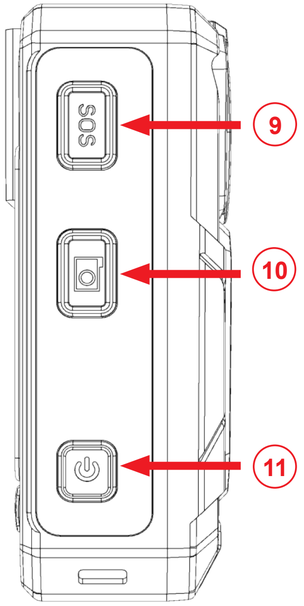

SOS Side

9. **Tagging and SOS**
10. **Take Photo**
11. **Power** - **[PRESS AND HOLD]** for power **“ON/OFF”**.
“**PRESS AND RELEASE”** for screen **“OFF”**.

Quick Start Guide

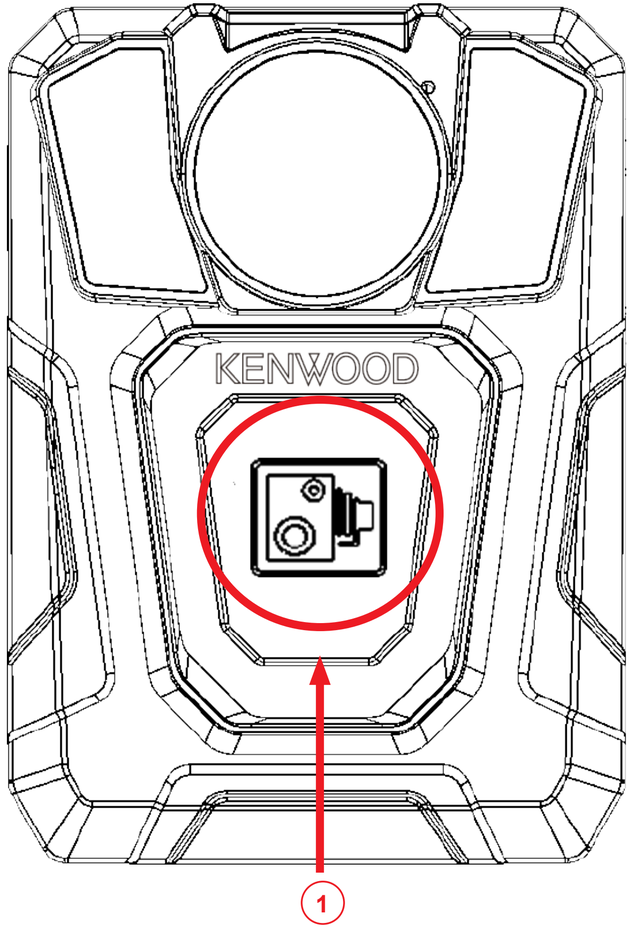

1. Record

[PRESS] the **“RECORD BUTTON”** on the front of the camera to record whilst the camera is turned ON. If the camera is OFF you can **[PRESS AND HOLD]** the front **“RECORD BUTTON”** for 5 seconds to turn the camera ON and start recording automatically.

Clips

The KENWOOD KWC-B21 body-worn camera supports all KlickFast clips and accessories, plus KENWOOD mounting options.

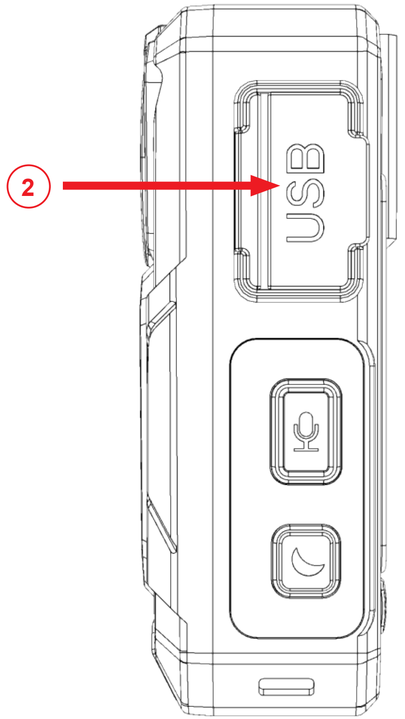

2. USB-C Input & Reset

Use the USB port to charge the camera from a computer or using an KENWOOD mini camera.

If the camera becomes unresponsive or requires a restart, use the tip of a pen to gently **[PRESS AND HOLD]** the reset button for approximately 5 seconds until the camera powers off. The camera can then be switched back on and will restart normally.

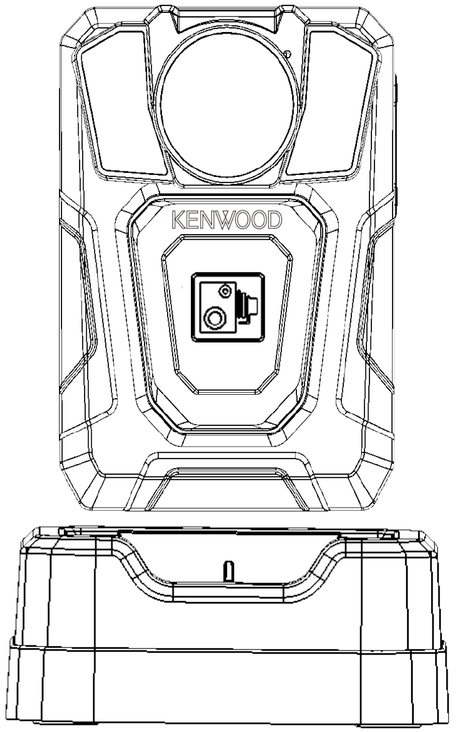

Docking

Use a KENWOOD docking station to charge the KWC-B21 and easily transfer footage to a secure system.

Mounting



Clip Attachment

Slide the clip into the mount from the top at the rear of the camera. The clip will click into place when fitted correctly.

Clip Detachment

Pinch the top of the clip to release the clip from the mount.



KENWOOD Stud

The KWC-B21 camera will work with any KlickFast accessory by using a KENWOOD stud. Insert the KENWOOD stud instead of the crocodile clip included with your camera.



Mounting Options

Slide the KENWOOD stud into your chosen dock, then rotate 180° to lock into place. This is compatible with all KENWOOD and KlickFast accessories.



General Camera Operation

Power ON/OFF

Press and hold the **[POWER ON/OFF]** button for 3 seconds; the camera will turn ON and enter the **“STANDBY MODE” (GREEN LED)** if [**PRE-RECORD]** is turned ON it will flash RED).

When the device is ON, pressing the **[POWER BUTTON]** for 3 seconds will turn the device OFF.

Video Recording

When you turn on the camera, the screen shows a live preview.

Press the **[RECORD]** button to start recording. The camera may vibrate and the **“WORK”** LED on the top will change to a solid RED. A RED circle will also show on the display screen.

Press the **[RECORD BUTTON**] again to stop recording; the device may vibrate and the **“WORK”** RED LED will turn OFF. At this point, recording will stop (unless **“POST-EVENT RECORDING”** has been selected) and the video will be saved. If recording is required in low light conditions, press the **[IR BUTTON]** (unless **“IR AUTO”** has been previously selected). The IR illuminators will be turned on and the device will enter the night shooting mode.

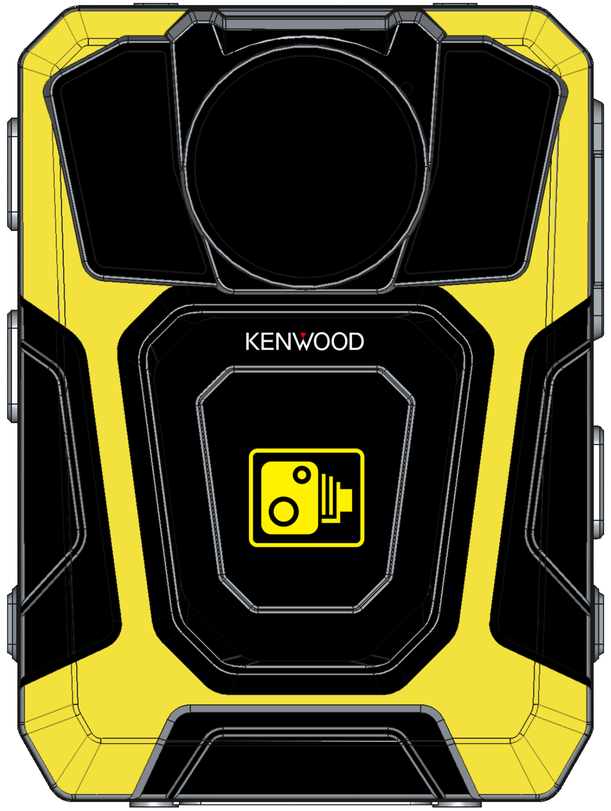

Photos

Once turned on, the device will automatically enter the “**CAMERA PREVIEW MODE”**. **“PRESS”** the **[PHOTO BUTTON]** to take still images. As already mentioned; if photos are to be taken in low light conditions, turn on the **[IR]** illuminators (unless **“IR AUTO”** has been previously selected).

When recording video, the **[PHOTO BUTTON]** can be pressed to capture a picture while still recording at that time.

Audio Recording

Once turned on, the camera will automatically enter the **“CAMERA PREVIEW MODE”**. **“PRESS”** the **[AUDIO BUTTON]** to record audio ONLY. The top LED turns RED and the camera beeps.

“PRESS” the **[AUDIO BUTTON]** again to end **“AUDIO RECORDING”**, and the audio file will be automatically saved.

IMPORTANT NOTE: Video recorded or photos taken when IR has been selected will be in black and white only.

Warnings

Password Protection

The KWC-B21 camera uses two separate passwords.

Settings Password
The default password is **“888888”**. The software will not allow access to settings and downloading without using this password. KENWOOD recommends that this password is changed and safely recorded at the earliest opportunity.
Replay Password
The default password is **“666666”**. Share the replay password with users who need to view recorded footage. This password does not provide access to settings or downloads.. KENWOOD recommend that this password is changed and safely recorded at the earliest opportunity.

IMPORTANT NOTE: If, after setting, your password is lost then the device will have to be returned to be reset. In that event, a fee will be chargeable and any footage held on the unit might be erased as part of the resetting process.

Leads

Only use the chargers and cables supplied with the camera. Using other chargers or cables might invalidate the KENWOOD warranty.

Internal Storage

Accessing or attempting to physically access the camera’s internal storage will invalidate the KENWOOD warranty.

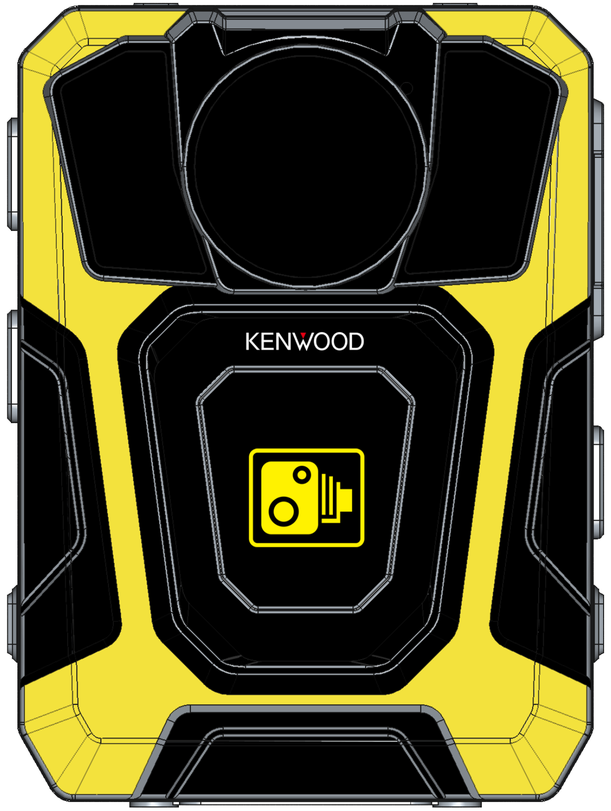

Charging Battery

Before using the camera for the first time, charge the battery for at least 4 hours.
The **“BLUE POWER LED”** on top of the camera will turn off when the battery is fully charged.

Your camera might arrive fully charged. If so, the blue charging light might not turn on when you connect the charger.

Screen Protectors

Your Camera will be dispatched with a protective film covering the camera lens (front) and viewing screen (back). **Please ensure that the film is peeled off before using.**

Connection to PC

The Camera DOES NOT allow direct connection to a PC for downloading of data. The ONLY way this can be achieved is by using the Camera Manager software. **(Please note that this process is different if using the KENWOOD Docking Station)**.

Changing Settings

KENWOOD recommends that you back up all recorded videos and photos before changing any system settings. Changing settings without a backup might result in the loss of recordings.

Video Settings - 1 of 2

- **Resolution**

There are six options to select from. The higher the resolution the better video quality.

- **Quality and Bitrate**

This allows you to change the quality of a recorded video.

- **Photo Size**

There are six options to select from. Select a higher photo resolution for more detail.

- **Selfie and Timer**

Press to initiate the selected countdown.

- **Timelapse**

Press to start taking pictures at the selected time intervals.

Press again to stop.

- **Burst Mode**

Press to take as many pictures as selected.

- **Streaming Resolution**

There are four options to select from. The higher the resolution the better video quality.

- **Streaming Frame Rate**

Higher frame rate means smoother video transmission.



- **Streaming Bitrate**

Higher bitrate gives better quality streaming.

- **Streaming Control**

OFF / VIDEO ONLY / AUDIO ONLY / TEXT ONLY / AUDIO AND VIDEO / ALL

- **H.265 Encoding**

This encoding saves battery and data at the cost of quality.

- **Pre-Record**

OFF / 5 Sec / 10 Sec / 15 Sec / 30 Sec / 60 Sec / 120 Sec. The camera temporarily stores footage in a buffer. When you press **[RECORD]**, the camera saves the preceding footage for the selected duration and continues recording.

- **Loop Record**

Overwrites oldest data to continue recording.

- **Post Record**

OFF / 5 Sec / 10 Sec / 20 Sec / 30 Sec / 60 Sec / 120 Sec. The camera continues recording for the selected duration after you press **[STOP RECORD]**.

- **One Touch Recording**

Camera records automatically when camera is turned on.

- **Image**

Press to take a picture. This will work even when recording.

Video Settings - 2 of 2

• Audio Length

Choose the length of each audio clip: 15, 30, 60 or 120 minutes.

• Mute Recording

OFF / Only PRE-RECORD / ON.

• Record Notification

Choose a recording reminder interval: Off, 5, 10, 20, 30 or 60 seconds. The camera will sound a reminder at each selected interval during recording. This setting does not affect the sounds at the start or end of recording.

• Motion Detect

Camera will detect movements and record automatically with this setting turned on. **“PRESS”** the **[RECORD BUTTON]** to arm.

• Video Length

2 / 5 / 10 / 15 (minutes) - Change how long each video clip will be.

• Audio Recording

Press to start recording audio. Press again to stop.

• File Tagging

Press the SOS button whilst recording to mark the video clip as important.

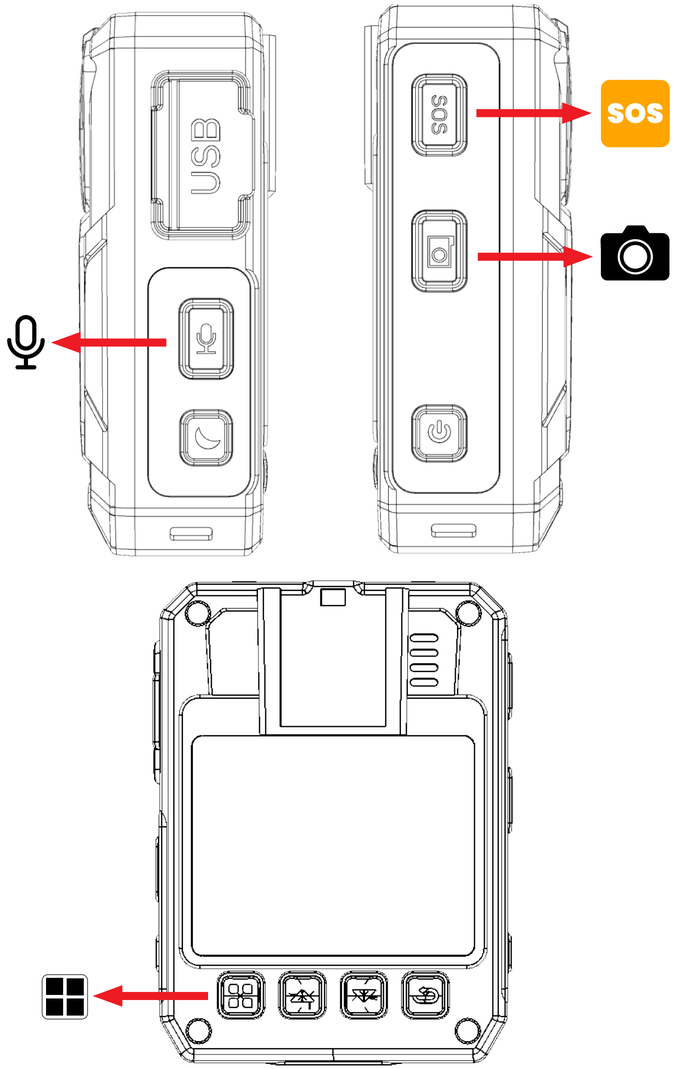

• Quick Switch from Audio/Video recording

During video recording, the button is disabled and cannot be used to switch to audio-only recording.
During audio recording, press the front **[VIDEO RECORD]** button to stop audio recording and begin video recording.

• Playback

In preview mode press the back button to access Playback menu. Choose from Video, Photo or Audio to browse.

• One Touch Playback

Whilst in preview mode press and hold the back button to check the last file recorded.

• Fall Trigger Recording

Detects a fall and automatically starts recording.

• Data Upload

Whilst in **“PREVIEW MODE”**, **[PRESS]** then input the settings password. Select **“Data Upload”** and **[PRESS]** again to enter the video upload interface then upload to CMS.

• Airplane Mode

[PRESS AND HOLD MENU BUTTON] to turn ON and OFF. Enables all camera transmissions and wireless communications to be disabled via a single button press.

General Menu Settings

• Access General Settings Menu

Press ⊞ and enter the settings password and then click on **[General]**.

• Password Mode

Turn passwords **“ON/OFF”**.
More infromation on Password Protection go to page 7

• Language

Select the appropriate language for the camera.

• GPS

Turn GPS functionality **“ON/OFF”**.

• Vibration

Turn vibration **“ON/OFF”**.

• IR Filter

OFF
Manual - Press ☾ to toggle **“IR ON/OFF”**.
Auto - Will come on in low light even in preview mode.
Recording Auto - Will come on when recording in low light.

• Auto Power OFF

Camera will turn off after the selected time period.

• LCD Auto OFF

Screen will turn off after the selected time period.
OFF - Screen will stay on.

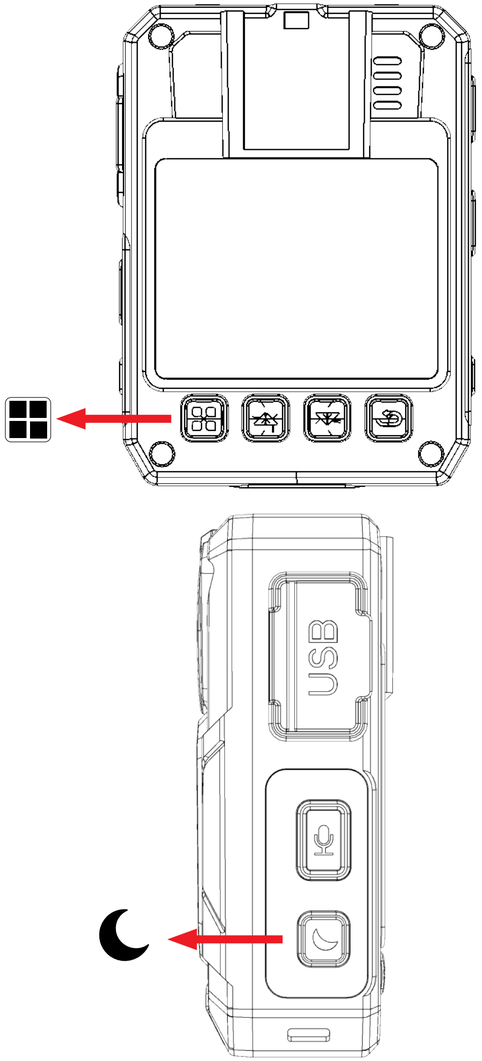

• Key Tone

Key press noises **“ON/OFF”**.

• Voice Volume

Higher number means higher volume.

• Voice Remind

The camera provides an audible reminder during recording.

• Hourly Reminder

Turn hourly reminder **“ON/OFF”**.

• LED Light

Turn LED indication **“ON/OFF”**.

• Car DV Mode

Turn Car mode **“ON/OFF”**.

• File Tagging

Turn LED indication **“ON/OFF”**.

• Stealth Mode

ON - Turn **“OFF”** all LED indicators, IR LED and all audible prompts.

• Enhanced Standby

Turn LED indication **“ON/OFF”**.

• Wi-Fi

A. Turn Wi-Fi ON/OFF
B. Power-up start OFF / Auto / Manual
OFF: Wi-Fi will not turn on automatically
Auto: Wi-Fi will turn on automatically
Manual: Wi-Fi will need to be turned on manually.
C. Mode: AP / Station / Direct

• Bluetooth

This can turn the Bluetooth module on and off. You can choose to turn it on manually and turn it on automatically.

About Device

• Device Overview

In **“PREVIEW MODE”**, press  to enter the setup menu. Select **[ABOUT]** the press  again.

It includes the following information:

- Location system info
- Total Space
- Remaining Space
- Remaining video
- Remaining Audio
- Remaining Photos
- Battery Status
- Temperature
- Server IP
- Server Port
- Account
- WLAN MAC
- WLAN SSID
- WLAN IP
- Bluetooth Address
- Serial Number
- Hardware Version
- Firmware Version

Camera Manager

• Software Compatibility

Windows 11 or older 10, 8.

• Camera Manager Login

Open the Camera Manager software on your computer. Connect the camera via a USB cable. Your camera will power on and connect to the computer.

There are two user types:

- **General User:** This mode allows for media transfer only.
- **Admin User:** This mode allows for media transfer and also settings alterations.

• Camera Information

After the login, the software will open on the camera **“INFO TAB”**.

- **Device Info:** Device Model and barcode.
- **Other:** Device ID, User ID, Firmware Version, Battery Level, Free space, Watermark. Make changes by typing in the field and clicking **[APPLY]**.
- **Refresh:** Update battery status.
- **Sync PC Date and Time:** Updates the camera time to match the host computer.
- **Open File Explorer:** Opens Windows Explorer so the user can access the SD card. Users will be able to check, copy or delete files.
- **Format Disk:** Erases the storage on the camera.

• Network Settings

These settings are predominantly used for Live Streaming.

• Camera Settings

All of the settings are the same as previous pages.

• Other Settings

Not generally used.

• AES Encryption

- There are four settings to choose from in the **“DATA ENCRYPTION”** drop-down menu; OFF / FILE ENCRYPTION / STREAMING ENCRYPTION / BOTH
- Decryption Play ON / OFF.
- AES Key - Change AES key if desired.

• Change Password

From here you can change the device passwords.

- Select the user account you wish to change.
- Enter the admin password then enter the new password for the selected user.
- Click apply to [**SAVE**].

IMPORTANT NOTE: Passwords can only be changed while logged in as an admin. The admin password will always be required when making changes to any account passwords.

USB Connection

IMPORTANT NOTE:
Please charge the camera using the cable and wall plug provided. The battery used in the camera is Lithium-ion. When camera is fully charged, blue indicator light will turn off.

• Charge via Computer

Be aware that since the current of a a computer's USB port varies this can cause the camera to not be able to fully charge.

• Charge via Mains Power

Use the included power adapter and cable to charge the camera from a regular power outlet.

• Charge via Docking Station

Use a KENWOOD dock for your camera to charge and download multiple cameras at once.

• Helmet Camera Use

Once the helmet camera is connected to the main camera via USB port, the camera display will show the live view from the helmet camera. When the camera is removed, the display will resume the preview from the normal camera.

FAQs

• My camera won't turn on

First, ensure the camera has been charged for at least 4 hours. If the camera still will not power on, possible causes include:
- Battery reaching the end of its service life
- Internal hardware fault
- Damaged power button.
- Firmware issue.

If the problem persists, the camera may require inspection, repair, or replacement.

• My camera turns on but only shows a white screen

A white screen is usually caused by:
- A loose or damaged screen connection
- Display failure
- Firmware issues

If restarting the camera does not resolve the issue, please contact your system administrator or support provider.

• The camera battery doesn't last as long as it used to

Battery performance naturally decreases over time. Signs that the battery may need replacing include:
- Reduced recording time
- Unexpected shutdowns
- Difficulty powering on
- Excessive heat during use

A replacement battery may be required.

• My camera records video but no audio

This is commonly caused by:
- Check Mute Recording
- Microphone damage
- A disconnected microphone component
- Internal hardware faults.

If there is no audio on recordings, the camera may require repair.

• What does a swollen battery look like?

Signs of a swollen battery can include:
- Buttons becoming difficult to press or stuck
- The screen lifting or separating from the casing
- The camera becoming unusually hot
- The device not powering on or off correctly

Important: If you suspect the battery is swollen, stop using the camera immediately and arrange for it to be inspected.

• Why does my camera show a blue memory card icon?

This usually means the camera cannot access its internal storage. Possible causes include:
- Storage device not being detected correctly
- Storage corruption
- Storage hardware failure

Contact your support team if the issue continues after restarting the camera.

FAQs

• My camera says “No SD Card” or storage is full

Try the following: Upload any stored footage, delete footage you no longer need, check for firmware updates, restart the device. If the issue remains, the storage may require repair or replacement.

• Why won’t the power button work?

Possible causes include:
- Physical damage to the button
- Internal switch failure, damage to the button mechanism

If the button does not respond consistently, the camera may require repair or replacement.

• Why does my camera have a green light permanently on?

A continuously illuminated green light can indicate:
- Firmware issues
- Internal hardware faults
- Power management problems

The camera may need a diagnostic check to identify the cause.

• The camera keeps turning itself off

This can be caused by:
- A deteriorating battery
- Firmware issues
- Internal hardware faults
- Power connection problems

If the issue occurs regularly, please arrange for the camera to be inspected.

• Why won’t my camera download footage?

Possible causes include:
- Firmware issues
- Storage problems
- Internal communication faults

Ensure the camera software is up to date and follow your organisation’s footage upload process. If the issue continues, technical support may be required.

• My recordings are blurry or out of focus

Blurry footage is commonly caused by:
- A dirty lens
- A loose lens assembly
- Physical damage to the camera

First, clean the lens with a soft, lint-free cloth. If recordings remain unclear, the camera may require repair.

• My camera is getting very hot

Excessive heat may indicate:
- Battery problems
- Charging issues
- Internal hardware faults

Important: Stop using the camera if it becomes unusually hot and arrange for it to be inspected as soon as possible.

• When is a camera replaced instead of repaired?

A camera may be replaced when:
- The main circuit board has failed
- Damage is extensive
- Repair costs exceed replacement costs
- Replacement parts are no longer available

Replacement decisions are normally made following a technical assessment.

Specifications

Camera	
Display:	2.0” colour TFT LCD
Lens Angle:	Wide angle: 165° lens | F2.0
Buttons:	**Front:** Video Record **Right Side:** Tagging & SOS | Photo | Power ON/OFF **Left Side:** USB-C Input & Reset | Audio Recording | IR Light **Rear:** 4 x Camera Settings (Menu Settings, Up, Down, Playback Mode and back to previous screen)
LED Indicators:	Fully configurable LED and haptic feedback response indicators, including vibration and audible alerts **Green:** Camera is powered ON **Red Solid:** Indicates the camera is recording **Red Slow Flashing:** Indicates pre-event recording enabled **Red Fast Flashing:** Indicates post-event recording enabled **White Flashing:** Camera is set-up for live streaming but isn’t streaming **White Solid:** Indicates camera is live streaming **Blue Solid:** Indicates charging (Turns OFF when fully charged)
Dimensions & Weight:	**H:** 77mm x **W:** 57mm x **D:** 26mm / 145g
What’s In The Box:	KWC-B21 camera, Crocodile clip, QR code linking to online instructions

Video Recording	
Recording resolution:	2560 x 1440 @ 30fps / 1920 x 1080 @60fps / 1920 x 1080 @30fps / 1280 x 720 @60fps / 1280 x 720 @30fps / 848 x 480 @30fps
Full HD:	1920 x 1080 at 60fps or 30fps
HD:	1280 x 720 at 60fps or 30fps
Standard Resolution:	848 x 480 at 30fps
Video Compression:	H.264 and H.265
Night Recording:	2 x IR Lights / Automatic / Night Recording Over 5 metres
Video Watermark Information:	User ID / Camera ID / Year / Month / Day / Hour / Minute / and GPS location embedded into video

Streaming Resolutions / Frame Rate / Bitrate	
Streaming Resolutions:	1920 x 1080 / 1280 x 720 / 848 x 480 / 432 x 240 pixels
Streaming Frame Rate:	5 / 10 / 15 / 20 / 25 / 30 fps
Streaming Bitrate:	300 / 500 / 1000 / 2000 / 3000 / 4000 / 5000 kbps

Connectivity, Control & Camera Management System Commands	
Wi-Fi:	2.4GHz and 5GHz
USB-C	Charging Camera (If not using docking station)
Charger & Download	Pogo Pin connection supports dock-and-go cable-free charging and footage transfer
Built-in GPS:	Yes, GPS location embedded into video footage
Live Video and Audio:	Supported
Geofencing:	Using the Camera Management System software the ability to add warning notes and alarms as required, including zone entry and zone exit
SOS Alerts:	Supported
Remote Recording Command:	Camera recording and live streaming of video and audio can be instigated remotely via Camera Management System software or the control room
Remote Stun:	Ability to remotely stun a lost camera device via command from the control room Camera Management System software
Motion Detection:	Supported
AUX Camera:	IR option for head mount, firearms, helmets, etc

Battery and Protection	
Battery:	2900mAh lithium battery - Charge time of 240 minutes
1080p Recording Time:	Up to 11 hours
Maximum Recording Time:	Up to 15 hours at 480p
Standby Time:	20 hours
Charging Time:	At least 4 hours
Dust and Water Protection:	IP67
Impact Protection:	Drop resistance level - 2 meters IK09
Certifications:	CE and FCC

Evidence Security	
Storage Encryption:	AES-256
Internal Memory:	32GB, Secure and non-removable
Password-Protected Settings:	Supported
User, Camera, Date, Time and GPS Identification:	Supported
Remote Memory Deletion:	Supported

Software Included	
Management software uses a one-time purchase model with no annual software licence fees.	
Docking and Assignment Digital Evidence Management System	Docking stations and Digital Evidence Management System (DEMS) software include QR code officer-to-camera assignment to facilitate easy daily deployment
Camera Management System	Supports live streaming, GPS tracking, mapping, geofencing, alerts, stun, remote recording and camera configuration

Important Information

Battery Safety

KENWOOD’s body cameras use lithium-ion batteries, similar to those used all over the world in nearly all portable devices, such as radios and mobile phones. KENWOOD’s cameras and batteries are independently safety and environmentally tested to ensure our legal and moral compliance with appropriate certification.

Damage to a lithium-ion battery can cause excessive heat build-up often accompanied by an audible “hissing” or “bubbling” sound, smoke, gas escape and, in extreme cases, combustion. (Thermal Runaway)

Potential triggers for thermal runaway are: Mechanical damage (puncture), thermal abuse (high temperatures), or electrical faults (short circuits, overcharging).

While KENWOOD have built in mitigation to try and prevent overcharging or overheating we also suggest the “40–80 rule”. The “40–80” rule suggests keeping the state-of-charge (SoC) of lithium-ion batteries between ~40% and ~80% to reduce stress and extend lifespan. Avoiding full charges (100%) and deep discharges (0% or near) significantly reduces chemical and thermal stress inside the battery cells.

Our camera casing is manufactured to provide a significant degree of battery protection, however, if the camera case becomes punctured or crushed by excessive forces, then there is a risk of battery damage. We therefore recommend that the camera user always performs a risk assessment.

If a camera becomes excessively hot or emits any unusual sounds or smoke/ Gas emissions, then:
• Immediately detach the camera and place in a well-ventilated and safe area.
• Never try and charge the camera.
• Contact your KENWOOD dealer or KENWOOD Support.

Battery Storage

Always store your KENWOOD cameras in a dry place, away from direct sunlight and sources of heat, at a temperature between -10°C and 45°C (14°F to 113°F). Lithium-ion batteries discharge naturally over extended periods of time and if not charged regularly, then the cells may deteriorate resulting in reduced performance and failure.

If your KENWOOD camera is kept & not used regularly then we recommend it should be charged to at least 50% of full charge every six months. Your warranty may be invalidated if you fail to recharge your battery regularly (or leave permanently connected to a charger and thus overcharge) or to follow other instructions for the storage, use or maintenance of any KENWOOD Products.

KENWOOD

www.kenwoodcommunications.co.uk/body-worn-camera/